AXA POWER
www.axapower.com

Manual

AXA 2300 Compact
400 Hz Ground Power Unit

With 28 VDC outlet (optional)

Serial no.	_____
Type	3GV -200/ -

AXA Power ApS • Smedebakken 31 – 33 • DK-5270 Odense N • Denmark
Telefon: + 45 63 18 60 00 • Fax: + 45 66 18 70 92 • E-mail: sales@axapower.com

Diagrams and drawings are subject to change without prior notice. Latest diagram versions can be found at www.axapower.com

Printed: February 2011

INDEX

1.0 Declaration of Conformity

CE

CE Declaration of Conformity

The declaration covers:

Designation : 400 Hz Ground Power Units

Type : 3GV…… (30 kVA to 90 kVA)

Description : Solid state power supply converting a three-phase mains supply into an isolated three-phase 400 Hz supply. Optionally, these units can be equipped with an additional 28 VDC output. The converters are typically applied as ground power for aircrafts.

Complying with following directives:

73/23/EEC (2006/95/EC)	((LVD)
2004/108/EC	(EMC)

Conformity attained by complying with:

EN61558-2-6	(LVD - Safety standard)
EN62040-1-1	(LVD - Safety standard)
EN61000-6-2	(EMC - Immunity standards)
EN61000-6-4	(EMC - Emission standards)

22.10.2009
Date

Søren R. Dahl, Development Manager

799.327B Rev. B

2.0 Safety Instructions

This unit is only intended to be installed, operated and maintained by competent persons having the necessary knowledge regarding delivery of external power to an aircraft. Prior to use, service and maintenance, the competent person must, be familiar with all relevant parts of this manual.

Electric Shock

To ensure personal health and safety, the electrical installation must fulfil all local regulations and legislation

- Touching live electrical parts can cause fatal shocks and severe burns.
- Internal parts where the voltage exceeds 50 V are covered and / or marked with:
- Keep all panels and covers securely in place.
- Have only qualified people remove covers for maintenance or troubleshooting.
- When connecting the unit to the aircraft, make sure that the output power is off.
- Frequently inspect the installation for damage and bare wiring – Repair / replace if necessary.

Moving Parts

- Keep away from fans.
- Have only qualified people remove covers for maintenance or troubleshooting.

Hot Parts

- Do not touch hot magnetics.
- Allow a cooling period before doing maintenance.

3.0 General Description

The below figure shows the basic principle of the AXA 2300 Compact Power. The 50/60 Hz mains voltage is converted into a galvanic isolated 3-phase, 400 Hz output voltage. A functional description of each part is given in the following sections.

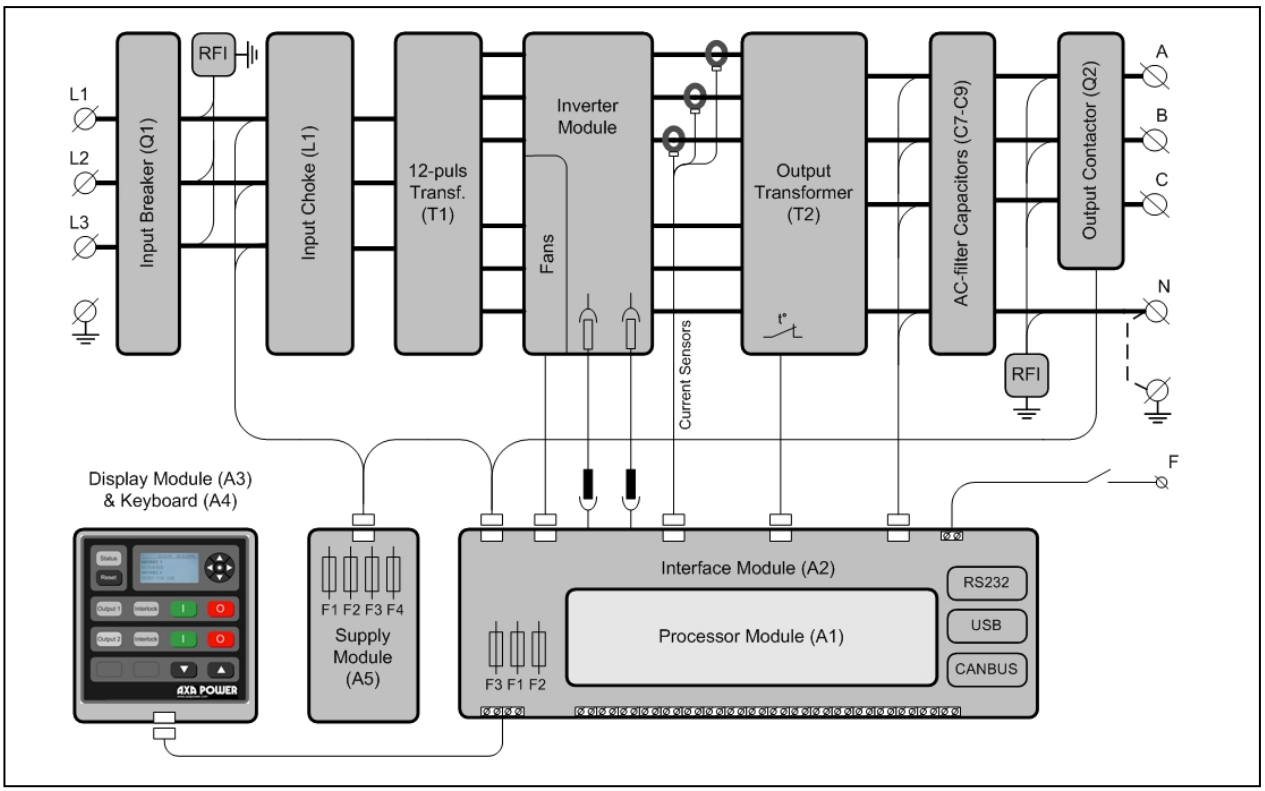

3.1 Basic Principle

Input Breaker (Q1):
The input breaker disconnects all power supply to the ground power unit. Upon engagement, the ground power unit passes into standby mode.

RFI (Input):
Filter to reduce the emission into the mains to such a level that surrounding equipment is not disturbed. In addition, the filter prevents voltage transients from reaching vital parts in the ground power unit.

Input Choke & 12-pulse Transformer (L1 / T1):
The combination of the choke, the 12-pulse transformer and the rectifier situated at the inverter module, ensures an almost sinusoidal line current and a power factor ~ 1. This means less stress on the main supply network and distribution transformers.

Inverter Module:
Beside the rectifier and the DC-filtering capacitors, the module consists of a 3-phase inverter, which generates a 400 Hz voltage system with a very low harmonic content and individual phase control. Two PCBs (gate drives) are used to interface between the control unit and the thyristors / IGBTs. Voltage supervision of the DC-filtering capacitors is likewise performed at the gate drives.

Output Transformer (T2):
The output transformer secures galvanic separation between in- and output. It also transforms the voltages from the inverter module into the required aircraft voltage (3 x 200/115 V). The filter choke for the output AC-filter is an integrated part of the transformer.

AC Filter Capacitors (C7-C9):
The harmonic content of the inverter voltage is further reduced by means of the AC Filter, resulting in a total voltage distortion of less than 2%. Complementing the filter choke (integrated in the transformer) and the AC capacitors, the ground power unit is equipped with a RFI-filter that reduces the high frequency emission from the ground power unit.

Output Contactor(s):
The ground power unit is equipped with one output contactor per outlet. The contactor is engaged at start-up of the corresponding output, and it is disengaged, when the stop button is applied. If the interlock voltage, provided by the aircraft, is not returned to the ground power unit within 1 second, the contactor disengages.

Interface Module (A2):
The purpose of this module is to interface between the processor module and the rest of the ground power unit. The interface module includes the following functions:

- Interface to the display module (e.g. RS485, 24 VDC and EPO link).
- Pre-fuse for display module (F3)
- Measuring transformers for supervision of the mains voltage.
- Measuring transformers for supervision of the 400 Hz output voltage.
- Interface for gate drives situated at the inverter module.
- Interface for current sensors situated at the inverter module.
- Relay control of fans situated at the inverter module.
- Relay control of output contactor(s).
- Input for temperature sensors.
- Pre-fuse of the 24 VDC for control purposes (F1-F2).
- I/O ports for remote control (Start, Stop etc.).
- Protected interface for interlock signals.
- Interface for individual overload protection.
- Neutral voltage supervision.
- Neutral conductor rupture supervision.
- Interface for RS232

Supply Module (A5):
Beside the generation of a 24 VDC control voltage, the module includes fuses for AC-short circuit protection (F1-F3), MOV's (varistors) for mains transient protection and a 10 A fuse (F4) for DC overload protection.

Processor Module (A1):
The processor module is based on a micro-controller and a digital signal processor (DSP). Together they regulate, supervise and diagnose eventual external and internal faults. As soon as the ground power unit is connected to the mains, and constantly during normal operation, the processor module runs through a self-check programme which checks all internal functions of the ground power unit. If an internal or external error is detected, the display shows the nature of the error. All immediate parameters related to a shut-down are stored in the ground power unit's memory.

Display Module & Keyboard (A3 / A4):
The display module serves as the interface for daily operation. Thanks to the RS485 communication, it is possible to situate the display module up to 1 kilometre away from the ground power unit. Further information in chapter 6.

4.0 Transport and Installation

4.1 Storage Before Installation

To secure optimal storage conditions prior to installation, it is recommended that the converter is stored inside to protect it from rain and excessive humidity while it is left without power on.
Only equipment in seaworthy packing can be stored outside.

4.2 Operational and Environmental Conditions after Commissioning

When the converter has been installed and commissioned, we advice that the input is always kept with input power on to provide optimal conditions for the electronic components and to avoid humidity in form of condensed water from reaching vital parts.
If for some reason the converter has been without input voltage for a period, a visual inspection should be carried out. In case that humidity is discovered on any internal parts, the parts have to dry out before input voltage is again applied.

4.3 Transport

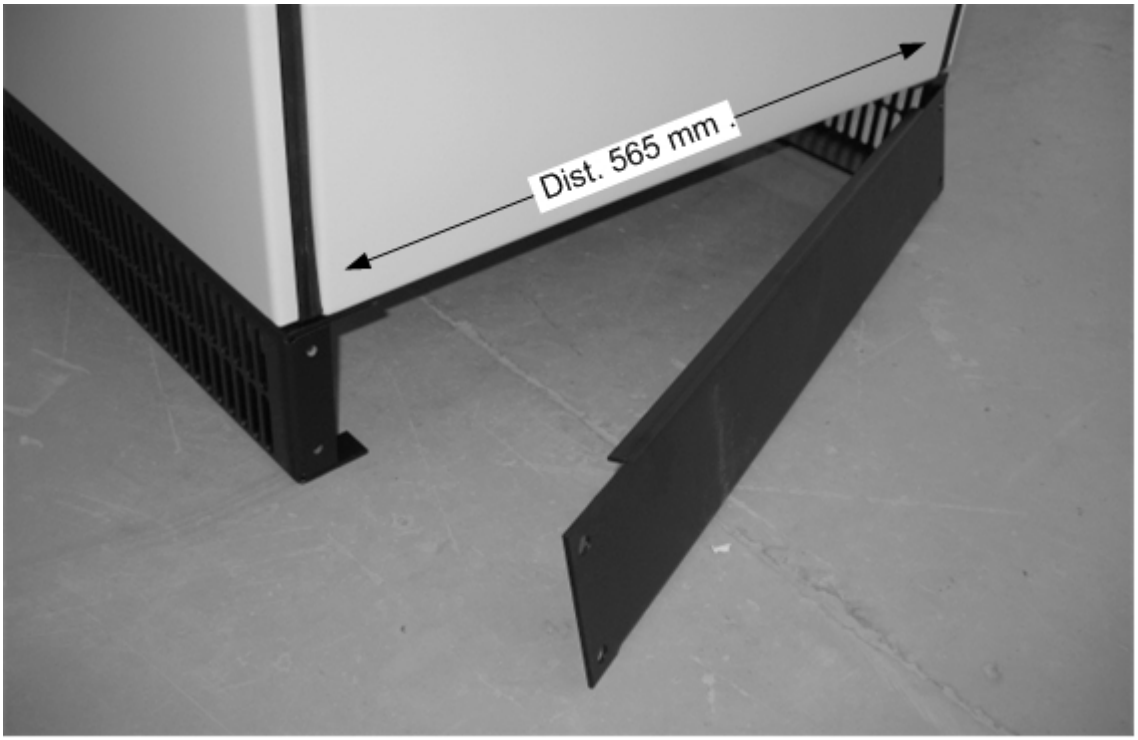

Fig. 4.3.1 Access for fork-lift, truck or similar
The access requires removal of 8 screws.

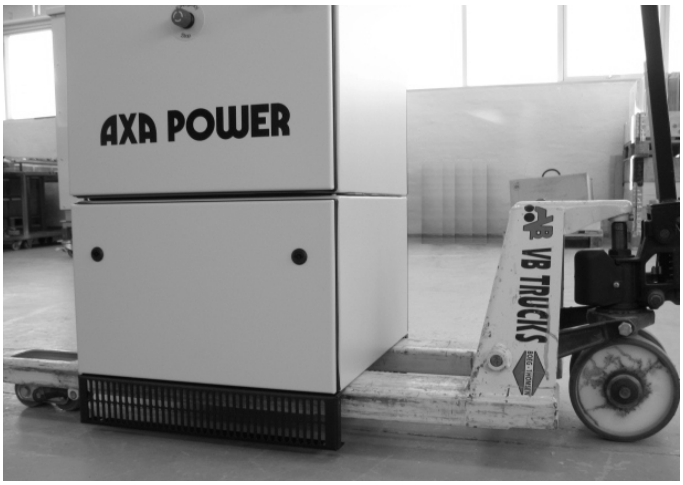

Fig. 4.3.2 Transport by fork-lift truck

4.4 Installation and fastening instructions

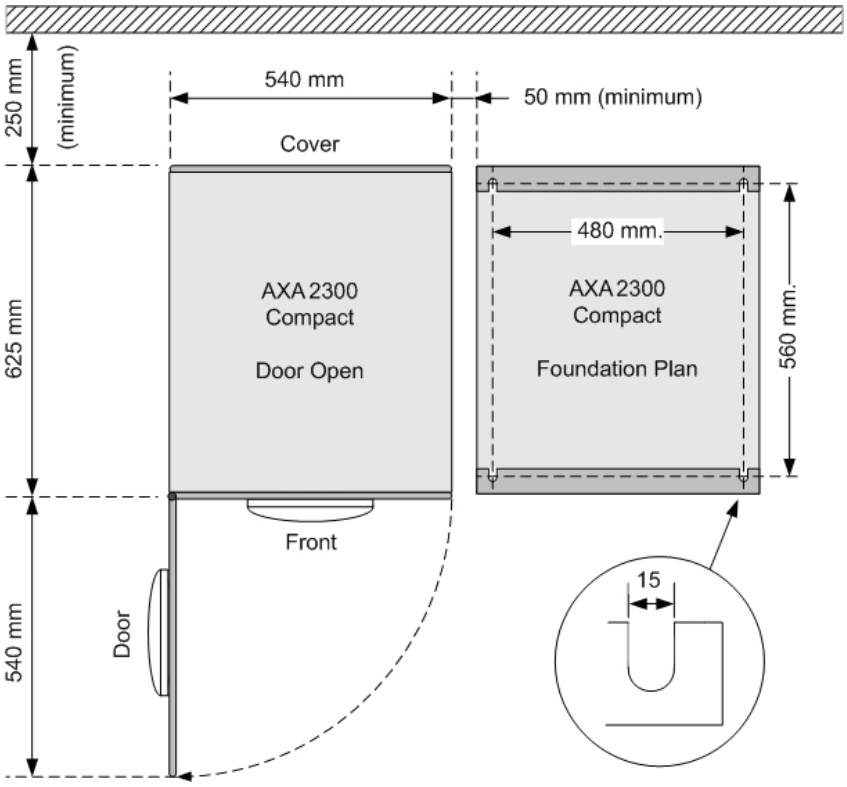

Fig. 4.4.1 Foot Print, Fixed Unit

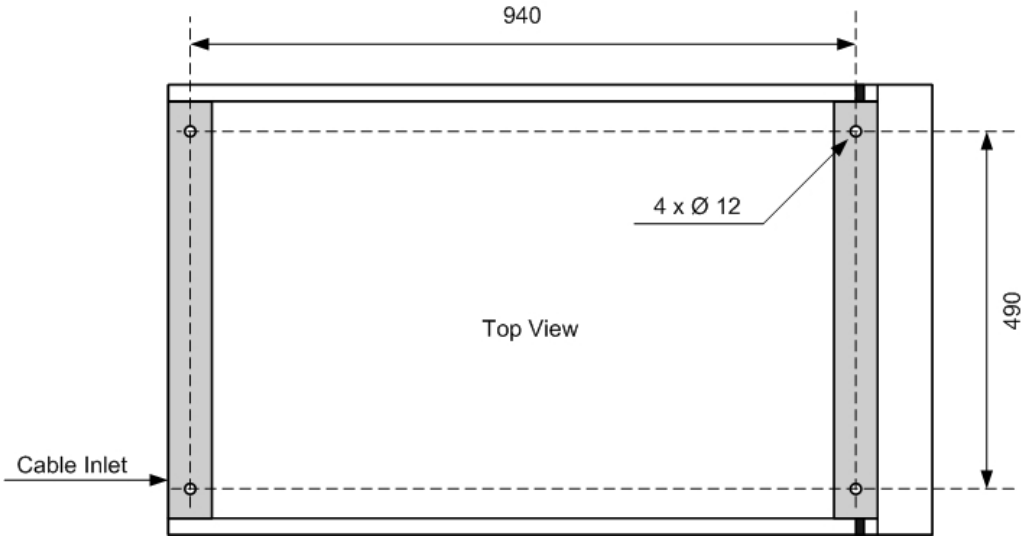

Fig. 4.4.2 Foot Print, Bridge-mounted Unit

4.5 Cable Inlet

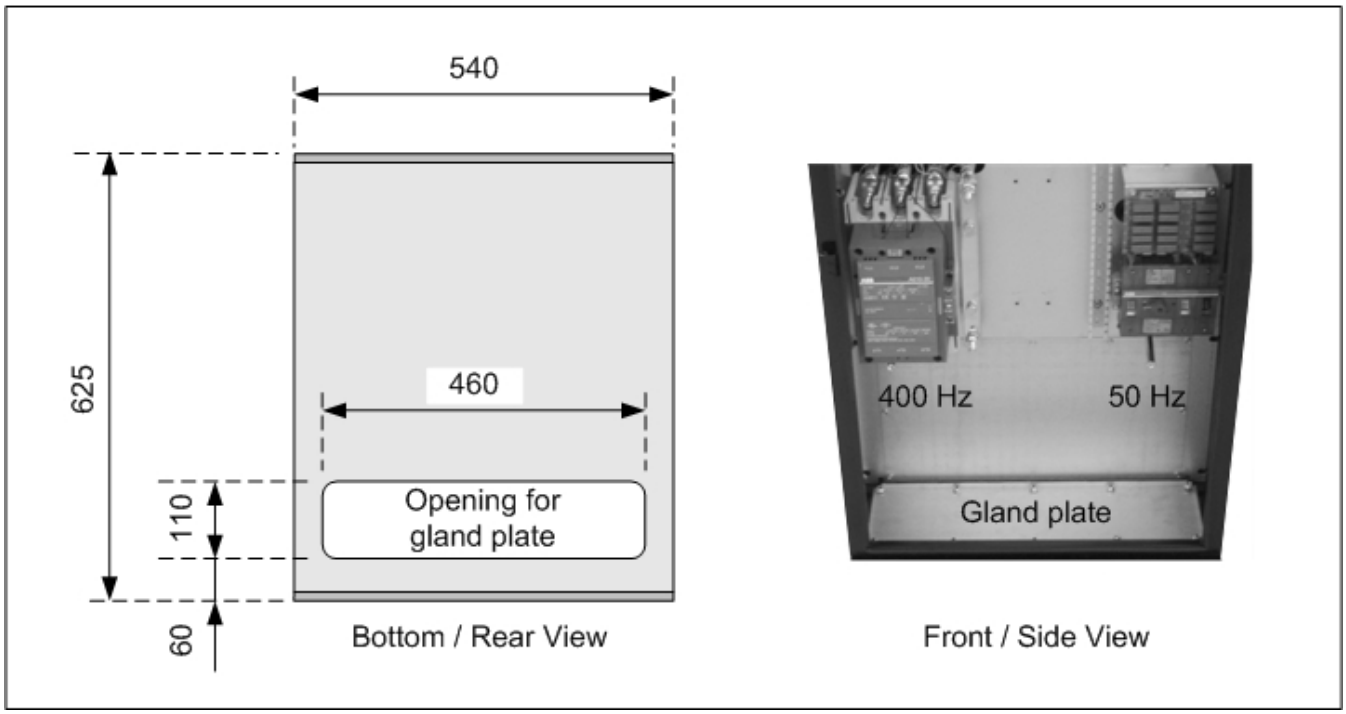

Fig. 4.5 Removable gland plate
situated inside the cubicle made of alu-zink to prevent corrosion at the cable gland holes

4.6 Connection of Cables

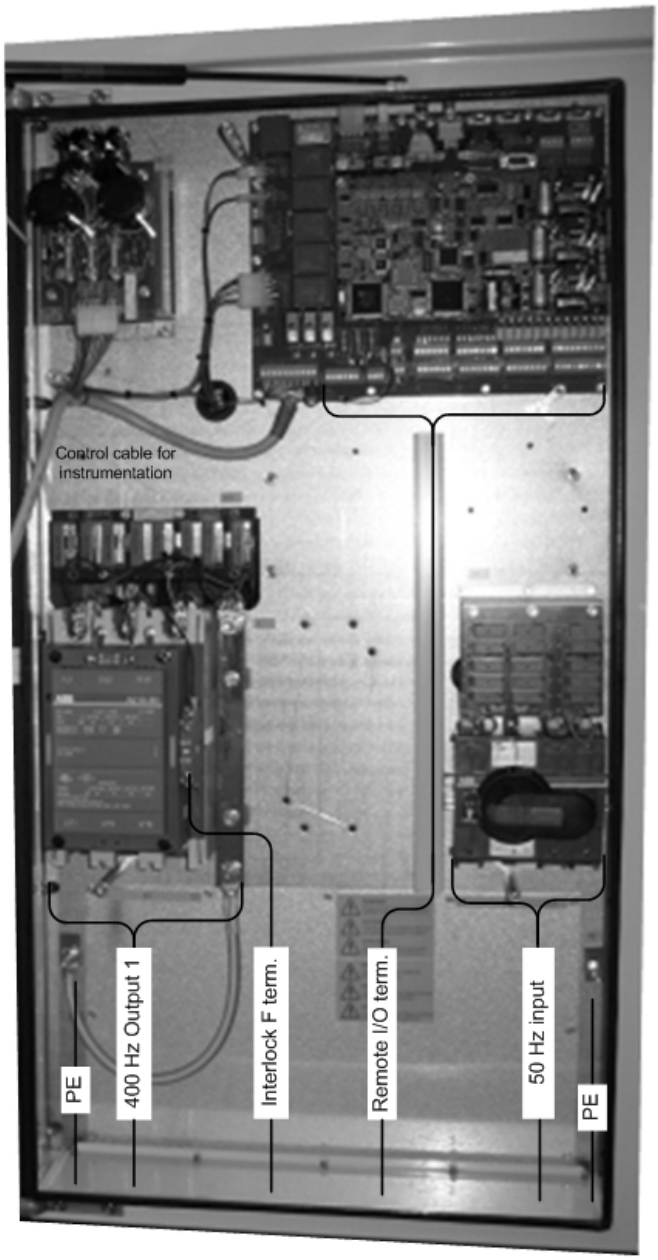

Remote I/O terminals

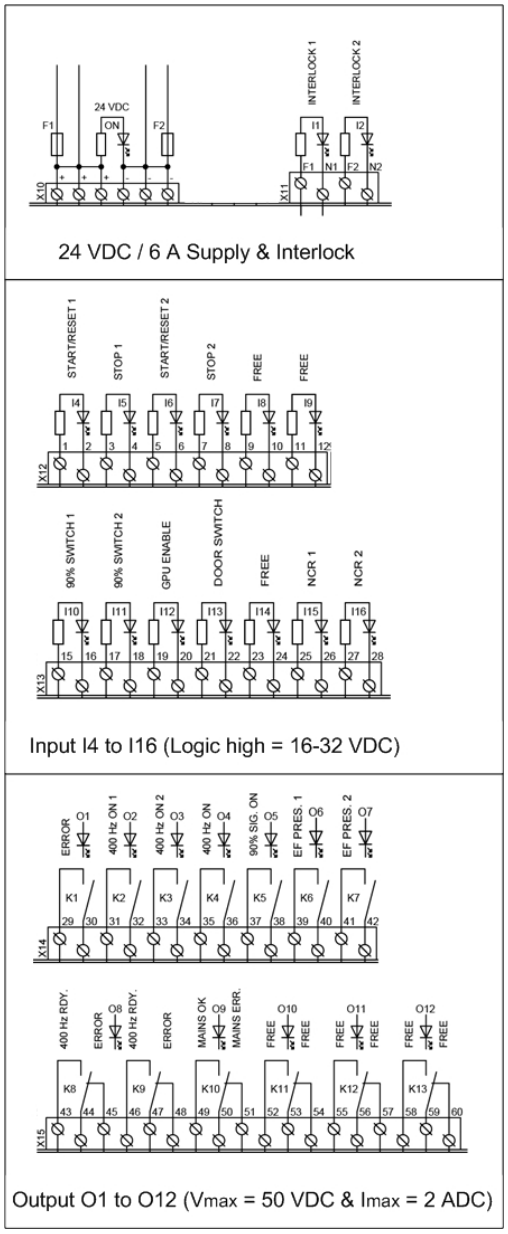

Fig. 4.6 Connection of cables

4.7 Mains Input

Due to personal health and safety, the AXA2300 unit must always be protected by grounding the PE terminal (⏚).

The mains input connection to the unit should be pre-fused according to section 5.0.

As a correct phase sequence is of importance for the function of the AXA2300, the ground power unit is equipped with an automatic phase sequence detection. The detection is automatically carried out when the mains is turned on. If the phase sequence is wrong, this is shown in the display, and correction is made by inversing two phases.

4.8 400 Hz Output

At delivery, the 400 Hz neutral is connected to the protective earthing terminal (PE). If a floating output is required, the yellow/green connection wire must be removed.

Independently of installation method, it is mandatory that local regulations and legislation are fulfilled in order to ensure personal health and safety.

4.9 400 Hz Interlock

The interlock safety system ensures that the output contactor stays engaged as long as the aircraft connector is inserted into the aircraft receptacle. The aircraft provides 28 VDC on the F terminal with respect to the 400 Hz neutral terminal.

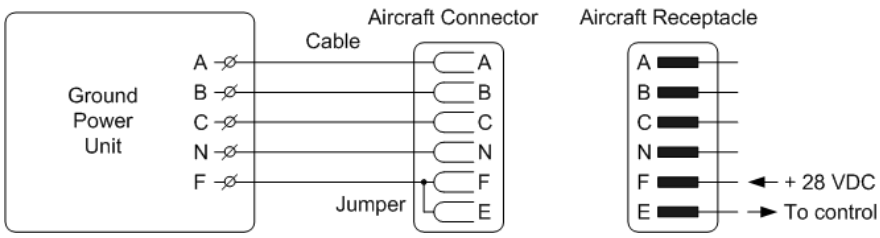

Fig. 4.9 Standard wiring diagram for civil aircraft

For service, maintenance and test purposes, the interlock system can be by-passed via the display setup. To ensure personal health and safety, the ground power unit automatically returns to its initial interlock mode, once it receives 28 VDC at the F terminal, e.g. when the ground power unit is connected to an aircraft.

To secure personal health and safety the interlock safety system must always be activated unless the ground power unit is undergoing service, maintenance or test by qualified personnel.

4.10 Control Interface (Remote I/O Terminals)

Via the remote I/O terminals it is possible to interface to:

- External Emergency Stop
- External Start / Stop & Indication.
- Equipment requiring potential free input signals
- 90 % Switch in aircraft connector (Optional - see section 11)
- Key reader, bridge, cable drum etc. via GPU enable (Optional - see section 11)
- Neutral conductor rupture (Optional - see section 11)

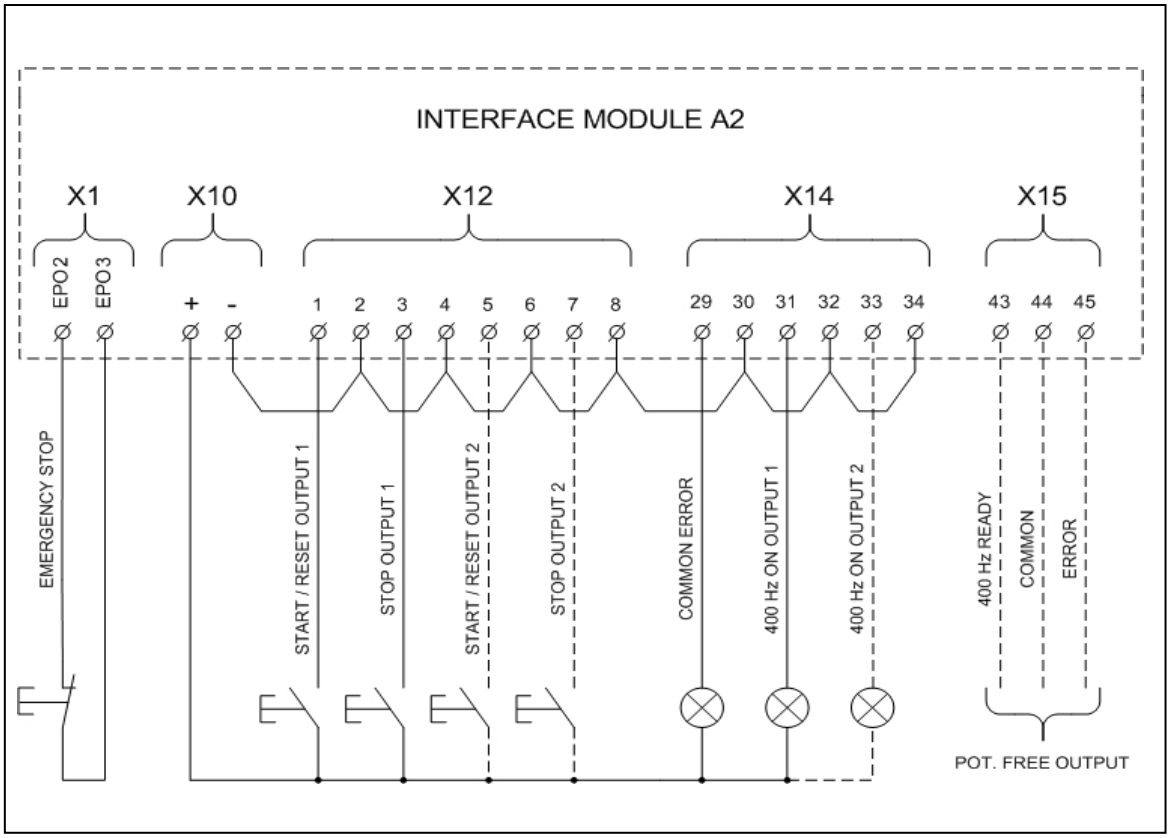

Fig. 4.10 Example of wiring for external control via the I/O terminals

Please refer to the diagrams at the very back of this manual, for a complete overview of the I/O terminals provided.

4.11 Interface via RS485 or TCP/IP

Please refer to section 11 for detailed information.

5.0 Technical Specifications

Standards:

ISO 6858	Aircraft ground support electrical supplies - general requirements
BS 2G 219	General requirements for ground support electrical supplies for aircraft
SAE ARP 5015	Ground equipment – 400 Hz ground power performance requirement
MIL-704E	Aircraft electric power characteristics
DFS 400	Specification for 400 Hz aircraft power supply
EN2282	Aerospace series characteristics of aircraft electrical supplies
EMC & Safety standards	Please refer to the declaration of conformity, chapter 1

Solid State Ground Power Unit:

Input:

Voltage	3 x 400 V ± 15 % or according. to customers spec.			
Frequency	50 / 60 Hz ± 5 %			
Rectification	12-pulse			
Rating	**30 kVA**	**45 kVA**	**60 kVA**	**90 kVA**
Line Current	38 A ± 15 %	58 A ± 15 %	75 A ± 15 %	112 A ± 15 %
Recommended pre-fusing	50 A	100 A	100 A	125 A
Line Current Distortion	< 10%	< 7%	< 10%	< 7 %
Power Factor	> 0.97 at 100 % load			
Inrush current	None, soft start			
Power interruption	Up to 20 ms			

Output:

Power	30, 45, 60 or 90 kVA, cos(φ) = 0.8
Voltage	3 x 200/115 V
Power factor	0.7 lagging to 0. 95 leading
Voltage regulation	< 0.5 % for balanced load and 30 % unbalanced load
Voltage transient recovery	ΔU < 8 % and recovery time < 10 ms at 100 % load change
Total harmonic content	< 2 % at linear load (typically < 1.5 %)
	< 2 % at non-linear load according to ISO 1540
Crest factor	1.414 ± 3 %
Voltage modulation	< 1.0 % (typically < 0.5 %)
Phase angle symmetry	120° ± 1° for balanced load
	120° ± 2° for 30 % unbalanced load
Frequency	400 Hz ± 0.001 %
Overload	100 % Power Factor 1 for 1 hour
	125 % Power Factor ≤ 1 for 10 minutes
	150 % Power Factor ≤ 1 for for 60 seconds
	200 % Power Factor ≤ 1 for for 30 seconds
	250 % Power Factor ≤ 1 for for 10 seconds
	300 % Power Factor ≤ 1 for for 1 second

Efficiency:

Overall efficiency	> 0.94 at 35-90 kVA load
at cos φ = 0,8	> 0.90 at 25 kVA load
Stand-by losses	< 50 W
No-load losses	< 2 kW

Protections:

Input over-and under voltage
Input overload
Internal voltage error
Internal high temperature
Output over-and under voltage (according to DFS 400)
Overload at output
Short circuit at output
No Break Power Transfer
Generative loads
Neutral voltage supervision

Miscellaneous:

Physical:

Dimensions	Kindly refer to outline drawing at folloring page
Weight	
Fixed and Bridge-Mount	330 kg
Mobile	500 kg

Environmental:

Operating temperature	-40°C to + 52°C (55° is optional)
Relative humidity	10-95 % (10-100 % optional)
Noise level	< 65 dB (A) at 1 m, typically 60 dB (A)
Ingress protection	IP55 electronic part

Miscellaneous:

MTBF (Proven)	100.000 hours
MTTR	Max. 20 minutes

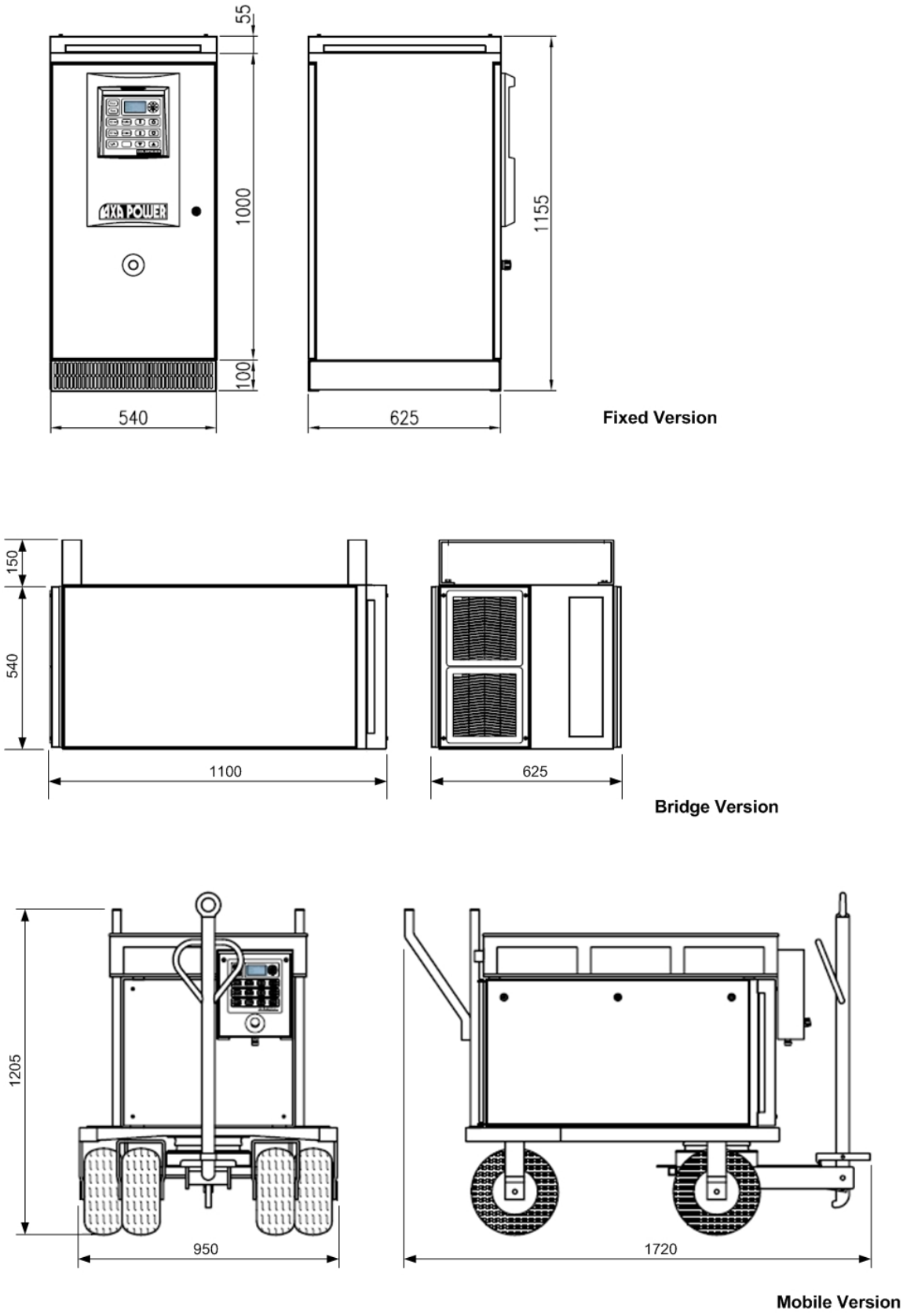

Fig. 5.1 Fixed, Bridge-Mount and Mobile Unit

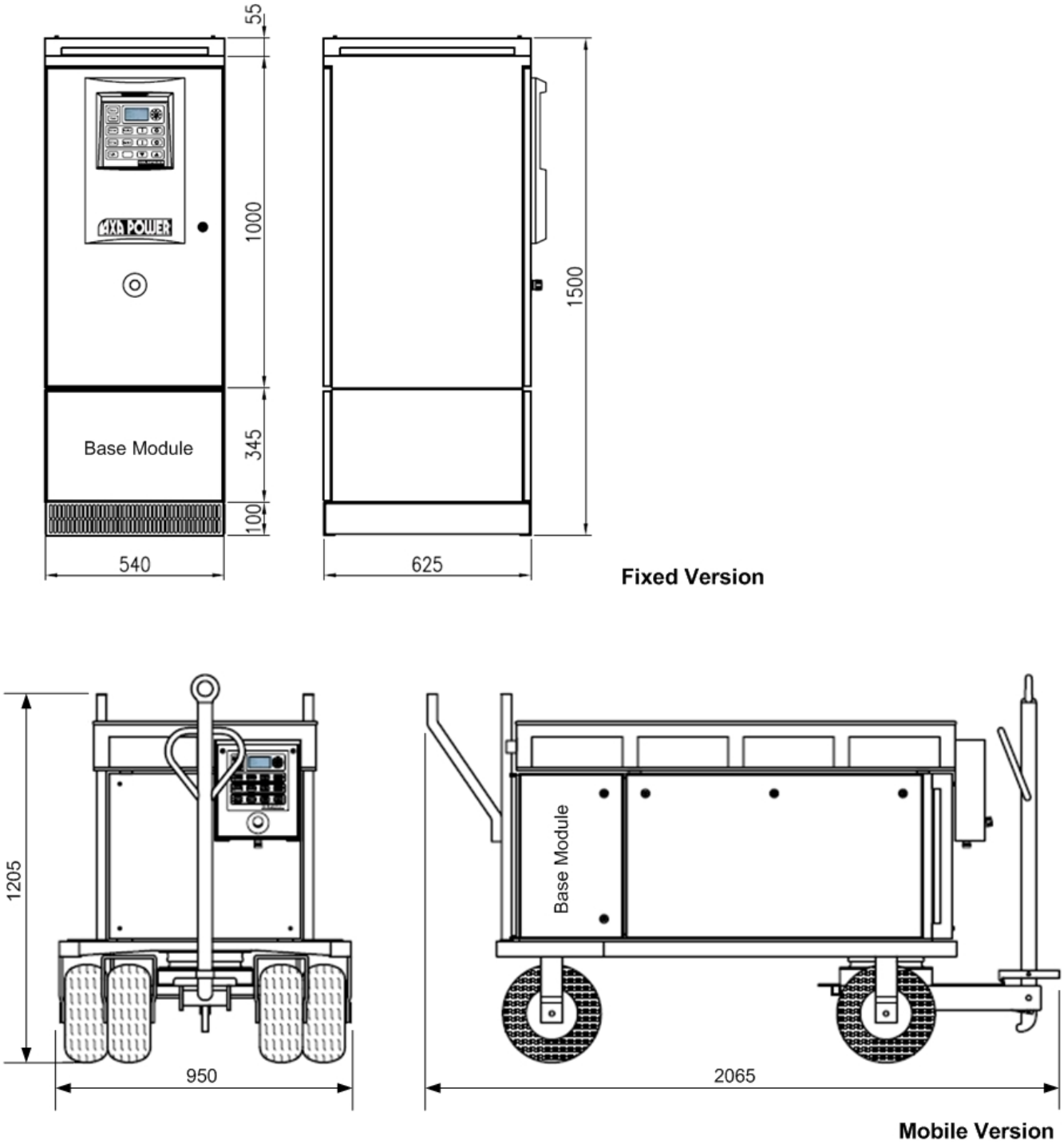

Fig. 5.2 Fixed and Mobile Unit with base Module

6.0 Operator's Instructions

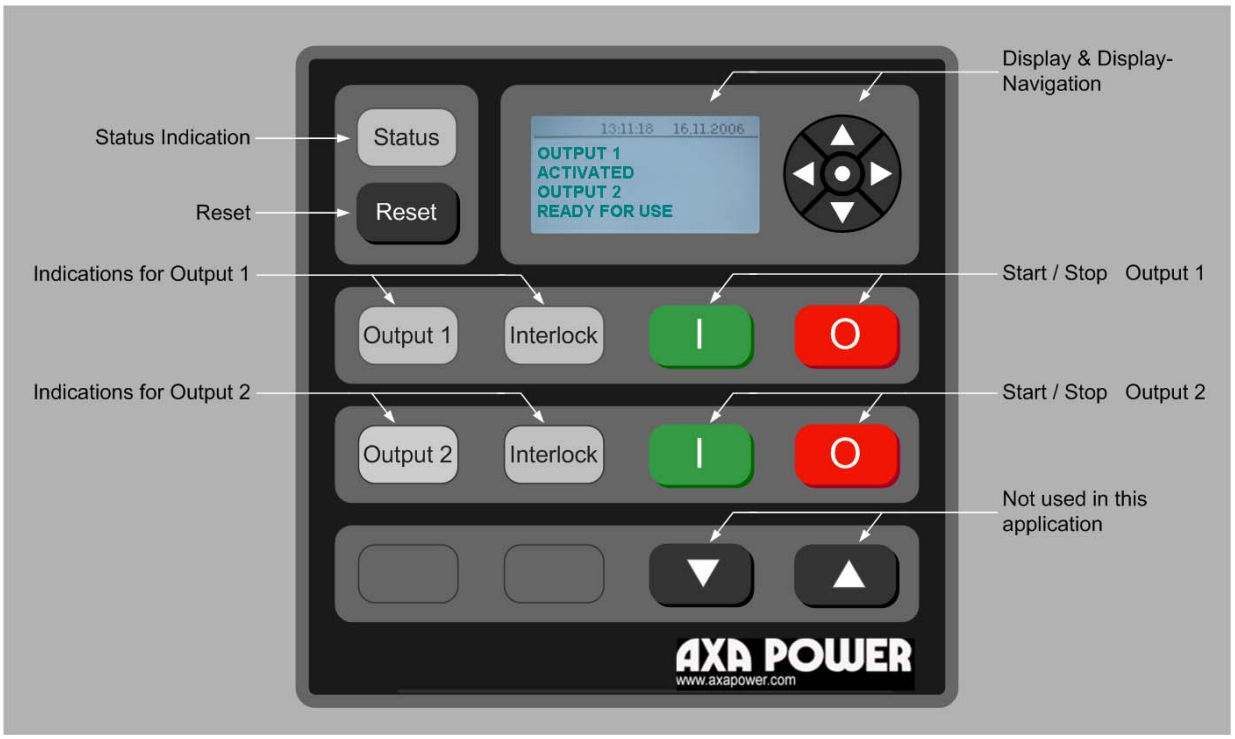

Fig. 6.1 Instrumentation for unit equipped with additional 400 Hz Output

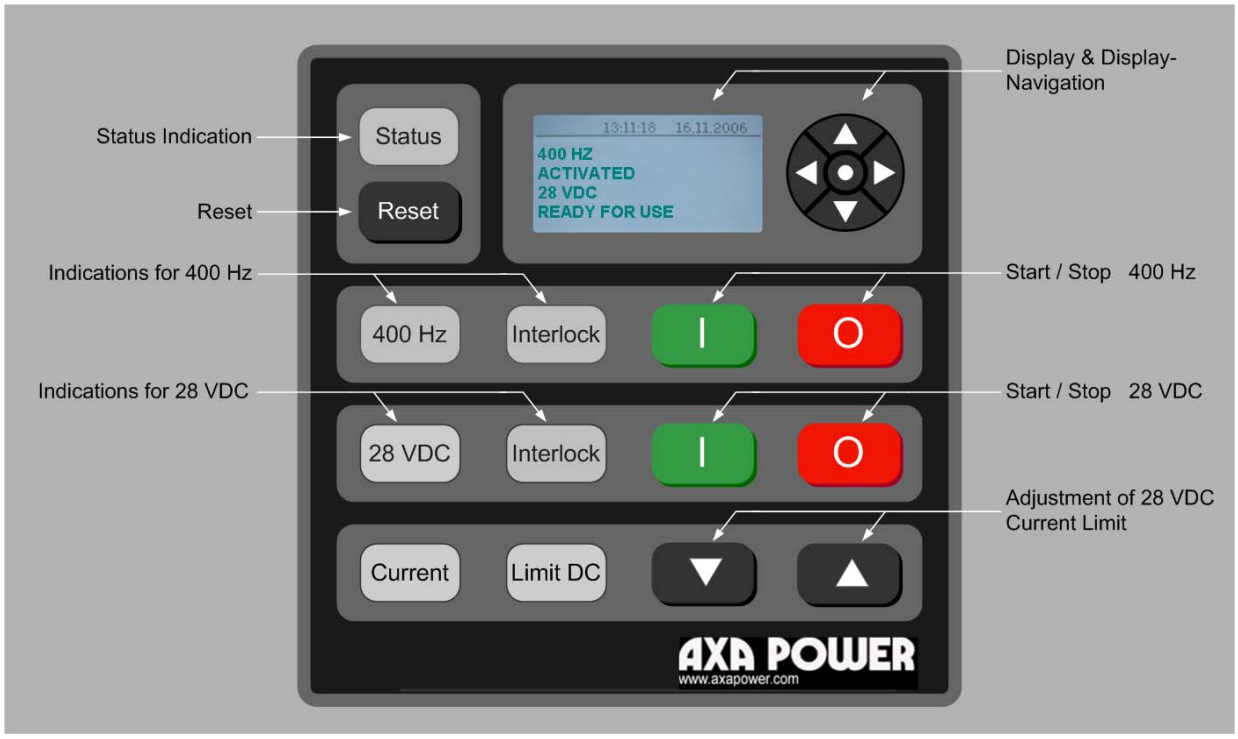

Fig. 6.2 Instrumentation for unit equipped with 28 VDC Output (optional)

6.1 Using the display:

There are four basic display modes:

- **Default Mode:** Shows the status of the ground power unit and makes it possible to browse through different ground power unit parameters. E.g. input voltage, output voltage, load etc.
- **Alarm Mode:** Facilitate browsing through previous errors and thereto related parameters
- **Power Log Mode** Browsing through previously recorded operations.
- **Setup Mode** Viewing and adjusting selected parameters – See chapter 7.

Fig. 6.3 Change between the display modes
press the horizontal arrow buttons

Fig. 6.4 View of parameters etc.
To view parameters, logged data and setup values related to the different display modes, press the vertical arrow buttons.

Whenever an error is detected, a snap shot of all the measured parameters is taken. To view the "snap shot parameters", select the specific error in Alarm Mode and press the centre button.

7.0 Set-up of Parameters

To view or change adjustable parameters, select Setup Mode and press the centre button for 5 seconds.

Browse through setup parameters by means of the vertical arrow buttons.

Press the centre button to select the parameter to be adjusted.

Adjust the selected parameter by means of the vertical arrow buttons.

Press the centre button to confirm the adjustment.

Return to previous mode by means of the horizontal arrow buttons

7.1 Adjustable parameters in Set-up Mode:

For units equipped with 28 VDC Outlet: Refer to section 12 for set-up parameters

- OUTPUT VOLTAGE (Phase-Neutral)
- COMPENSATION TYPE (Manual or Plug & Play – See next page)
- CABLE IDENTIFICATION (No / Yes – Plug & Play compensation)
- CABLE COMPENSATION (Output 1 and Output 2, if present – Manual compensation)
- REAL TIME CLOCK (Year, month, day, etc.)
- INTERLOCK BY-PASS (On / Off)
- SERIAL PROTOCOL (1=3964R and 2=JBUS)
- JBUS SLAVE ADDRESS (provided JBUS is selected)
- FAN CONSTANTLY ON (On / Off)
- LANGUAGE
- NEUTRAL VOLTAGE SUPERVISION
  If the voltage level between the 400 Hz neutral and ground exceeds the preset level for more than 1 second, the output is disengaged.
  The neutral voltage supervision can be bypassed by setting the trip level to 0 V.

7.2 Lock of set-up parameters

To avoid unintentional modification of the Set-up parameters, it is possible to block the access to the Set-up Mode, by means of a DIP switch situated at the Display Module A3.

Fig. 7.1 Display Module A3

7.3 Cable compensation set-up:

Plug & Play:

The unique Plug & Play compensation system automatically identifies all relevant cable parameters and keep the voltage at the aircraft connector constant, at all aircraft loads.

1. Short circuit the aircraft connector by means of the Auto Calibration Plug (p/n 591100).
2. Select compensation type to “PLUG & PLAY” via Setup Mode.
3. Change “IDENTIFY CABLE” to “YES”
4. Initiate the cable identification process by pressing the ground power unit’s START button.

5. Within a few seconds, the cable parameters are identified and the ground power unit returns to Default Mode.
6. Remove the Auto Calibration Plug and the ground power unit is ready for use.

Please be aware that it is **not** possible to use the Plug & Play voltage compensation if the ground power unit is equipped with two or more outlets !

7.4 Manual Compensation:

This is the traditional (Manual) method of cable compensation, where the output voltage is increased in proportion to the load current (Volt / 100 A). This method it usable where the influence of unsymmetrical cables, unbalanced load and varying power factor can be neglected. Manual compensation is applicable for ground power units equipped with two outlets.

1. Apply nominal load at the aircraft connector.

2. Select compensation type to “MANUAL” via Setup Mode.

3. Select “CABLE COMP. OUTPUT 1”.

4. Adjust the compensation by means of the vertical arrow buttons until the voltage at the aircraft connectors equals the no load value.

If the ground power unit is equipped with a second outlet, the same procedure is applied for “OUTPUT 2”.

8.0 Service, Maintenance, Overhaul

To make certain that the unit is always ready for use, it must be maintained on a regular basis.

Only have qualified people remove covers for service, maintenance or overhauls.

8.1 Recommended Maintenance Schedule

• Check Aircraft connector.	Quarterly
• Check Output cable for damaged insulation.	Quarterly
• Verify function of 90 % Switch, if present.	Quarterly
• Check Air-filters - Wash or change as appropriate.	Quarterly
• Check that all fans are running properly (constantly on via display).	Yearly
• Check rubber sealing at front door, rear panel and top cover	Yearly
• Check internal bolt/screw and wire connections.	Yearly
• Check vibration dampers (via rear panel).	Yearly
• Visual inspection of PCB's - control unit / gate drive.	Yearly
• Control of the output contactors' contact sets and coil	Yearly
• Control of output voltage at aircraft connector (with and without load)	Yearly

Especially for mobile units

• Check tyres for wear and tear	Yearly
• Check correct air pressure (4,3 Bar = 62 PSI)	Quarterly

8.2 Battery back-up

Situated on the processor board, a lithium battery ensures that set-up data etc. are not lost during mains drop-outs. The expected life of the battery is approx. 10 years. However, a low battery voltage does not affect the internal safety system of the GPU that monitors the output voltage, among others. Thus aircraft connected to the GPU are not exposed to any danger. To avoid loss of data we recommend to change the battery after 8-9 years of use.

9.0 Trouble Shooting & Repair

Only have qualified people remove covers for troubleshooting and repair. Please be aware that the DC Capacitors can remain charged to a dangerous voltage up to 5 minutes after the mains input has been disconnected.

Usually the display text provides sufficient information to get the ground power unit into operation again. In case the display is blank, please check fuse F1, F2 and F4 at the Supply Module A5 and fuse F3 at the Interface Module A2.

If the displayed text does not provide sufficient information to solve the problem, Table 1, Table 2 and Table 3 suggests prioritized corrective actions to be carried out for each error code.

Additional error-information regarding the input voltage, output voltage, transformer filter current, overload and short circuit can be derived from the error code according to the following directions:

Error Code XX01 refers to output phase A (or input phase L1)
Error Code XX02 refers to output phase B (or input phase L2)
Error Code XX03 refers to output phase A and B (or input phase L1 and L2)
Error Code XX04 refers to output phase C (or input phase L3)
Error Code XX05 refers to output phase A and C (or input phase L1 and L3)
Error Code XX06 refers to output phase B and C (or input phase L2 and L3)
Error Code XX07 refers to all output phases (or all input phases)

Examples: Error Code 1001 refers to a too high input voltage at phase L1.
Error Code 4007 refers to overload at all 3 output phases.

9.1 Fault Guidance

In case that you need to contact AXA for further fault guidance, please do not forget to enter the serial number of the GPU (can be found at the rating plate) and the actual error code on the fault finding formula that can downloaded from www.axapower.com (pls. refer to section After Sales Department)

DISPLAY INFORMATION: Error Code Failure Description	CORRECTIVE ACTIONS: Apply the suggested corrective actions in the prioritized order: 1, 2, 3 ...																	
	Reset / Restart unit	Replace Processor Module A1	Replace Interface Module A2	Check Power Supply voltage (> 20 VDC)	Replace Pover Supply Module A5	Check output voltage via disp. Alarm Mode	Check Inverter Module (wiring / gatedrive)	Replace Inverter Module	Check Interface Module (wiring)	Check input voltage	Check fuse F1-F2 at Interface Module A2	Check fuse F1-F3 at Supply Module A5	Check DC voltage via display Alarm Mode	Check R1 at Inverter Module (2 x 4,7 kohm)	Check electrolytic cap. at Inverter Module	Check filters/fans - bypass control via setup	Check supply voltage to fans (24 VDC)	Check Emergency Stop
0000-0099 NO ERROR LOGGED YET																		
0100-0199 LOGGING WAS NOT COMPLET. SUCCESFULLY	1	3		2	4													
0150 WATCHDOG RESET OCCURED	1	2																
0200-0299 INTERNAL DC SUPPLY VOLTAGE ERROR	1	4		3	5					2								
0300-0399 EMERGENCY STOP ACTIVATED OR FUSE BLOWN											2							1
0400-0499 AC SOFTSTART ERROR	1	2																
0500-0599 INVERTER ERROR	1	5	7			2	3	6	4									
0600-0699 INPUT VOLT. - PHASE SEQUENCY NOT FOUND	1	2																
0700-0799 INPUT VOLTAGE - FREQUENCY TOO HIGH	1	4	5						3	2								
0800-0899 INPUT VOLTAGE - FREQUENCY TOO LOW	1	4	5						3	2								
0900-0999 INPUT VOLTAGE - PHASE SEQUENCY WRONG	1	4	5							2		3						
1000-1099 INPUT VOLTAGE TOO HIGH	1	4	5						3	2								
1100-1199 INPUT VOLTAGE TOO LOW	1	4	5						3	2								
1500-1599 DC VOLTAGE < 350 V	1	5					3	4					2					
1600-1699 DC VOLTAGE > 850 V	1	5					3	4					2					
1700-1799 DC CAPACITOR SHARING ERROR	1	7					3	6					2	4	5			
2000-2099 INVERTER TEMPERATURE TOO HIGH	1	5					4	6								2	3	
2100-2199 GATE VOLTAGE ERROR	1	3					2	4										

NB!
Before replacing any components please check the associated wiring.

Table 1: Error Codes 0000 - 2199

DISPLAY INFORMATION: Error Code Failure Description	CORRECTIVE ACTIONS: Apply the suggested corrective actions in the prioritized order: 1, 2, 3 ...																	
3000-3099 OUTPUT OVERVOLTAGE: U > 128 V - 250 ms	1	4	5	2	3													
3100-3199 OUTPUT OVERVOLTAGE: U > 140 V - 15 ms	1	3	4		2													
3300-3399 OUTPUT OVERVOLTAGE: U > 32 V - 4 s	1	5	7	2	4											3	6	
3400-3499 OUTPUT OVERVOLTAGE: U > 40 V - 1 s	1	4	6		3											2	5	
3500-3599 OUTPUT UNDERVOLTAGE: U < 100 V - 300 ms	1	5	7	2	3	4	6											
3600-3699 OUTPUT UNDERVOLTAGE: U < 90 V - 50 ms	1	4	6		2	3	5											
3700-3799 OUTPUT UNDERVOLTAGE: U < 70 V - 10 ms	1	4	6		2	3	5											
3900-3999 OUTPUT UNDERVOLTAGE: U < 20 V - 30 s	1	5	7	2	4											3	6	
4000-4099 OVERLOAD: 100 % < I < 125 % - 600 s	1	4	5		3			2										
4100-4199 OVERLOAD: 125 % < I < 150 % - 60 s	1	4	5		3			2										
4200-4299 OVERLOAD: 150 % < I < 200 % - 30 s	1	4	5		3			2										
4300-4399 OVERLOAD: 200 % < I < 250 % - 10 s	1	4	5		3			2										
4400-4499 OVERLOAD: I > 250 % - 1 s	1	4	5		3			2										
4500-4599 SHORT CIRCUIT AT OUTPUT	1	4	5		3				2									
4600-4699 TRANSFORMER FILTER CURRENT TOO LOW	1	5			3	4	6			2								
4700-4799 TRANSFORMER FILTER CURRENT TOO HIGH	1	3			2					5	4							
4800-4899 TRANSFORMER TEMPERATURE TOO HIGH		5	6									1	2	3	4			
4900-4999 28 V RECTIFIER TEMPERATURE TOO HIGH		5	7			4						1				3	6	2
NB! Before replacing any components please check the associated wiring.	Reset / Restart unit	Replace Processor Module A1	Replace Interface Module A2	Check voltage setup & volt. compensation	Check Interface Module A2 (wiring)	Check Inverter Module (wiring)	Replace Inverter Module	Remove overload and Reset + Start	Disconnect load / output cable	Check output filter capacitors C7-C9	Check 400 Hz Output Transformer T2	Let the unit cool down, then Reset + Start	Check filters/fans - Bypass control in setup	Short circuit sensor at Interface Mod. A2	Replace sensor if defective	Check TRU Interface A6 (wiring)	Replace TRU Interface A6	Check temp. sensor at rectifier heatsink

Table 2: Error Codes 3000 - 4999

DISPLAY INFORMATION: Error Code Failure Description	CORRECTIVE ACTIONS: Apply the suggested corrective actions in the prioritized order: 1, 2, 3 ...																	
5000-5099 EARTH / INSULATION ERROR AT OUTPUT	2	7	5	8	1	3	4	6										
5100-5199 NEUTRAL CONDUCTOR RUPTURE OUTPUT 1	1	4	3	5		2												
5200-5299 NEUTRAL CONDUCTOR RUPTURE OUTPUT 2	1	4	3	5		2												
5300-5399 OVERLOAD OUTPUT 1	1	5	4	6					2	3								
5400-5499 OVERLOAD OUTPUT 2	1	5	4	6					2	3								
5500-5599 ADAPTION TRANSFORMER OVERHEATED		5		6							1	2	3	4				
5600-5699 NEUTRAL VOLTAGE SUPERVISION ERROR	1	6	5	7		3									2	4		
5700-5799 DIP SWITCH IN WRONG POSITION																	1	
5800-5899 ERROR: CABLE IDENTIFICATION FAILED	1																	2
5900-5999 CABLE SUCCESFULLY IDENTIFIED																		
6000-6099 END OF TEST																		
XX00-XX99 NOT A DEFINED NUMBER	1	2																
NB! Before replacing any components please check the associated wiring.	Reset / Restart unit	Replace Processor Module A1	Check Interface Module A2 (wiring)	Replace Interface Module A2	Reset RCM Relay	Check / repair installation	Check RCM Relay and Sensor (wiring)	Replace RCM Relay	Remove overload and Reset + Start	Check wiring between CT's and A2 (X5)	Let the unit cool down, then Reset + Start	Check filters/fans - Bypass control in setup	Short circuit sensor at Interface Mod. A2	Replace sensor if defective	Check setup value	Check output for insulation failures	Set switches (SW2) acc. to label	Check presence of short circuit.

Table 3: Error Codes 5000 – 6099

10.0 Illustrated Parts List

Please refer to www.axapower.com for a recommended list of spare parts (Section Product). There you can also find diagrams and drawings of the unit. Most parts may be available via our web-shop.

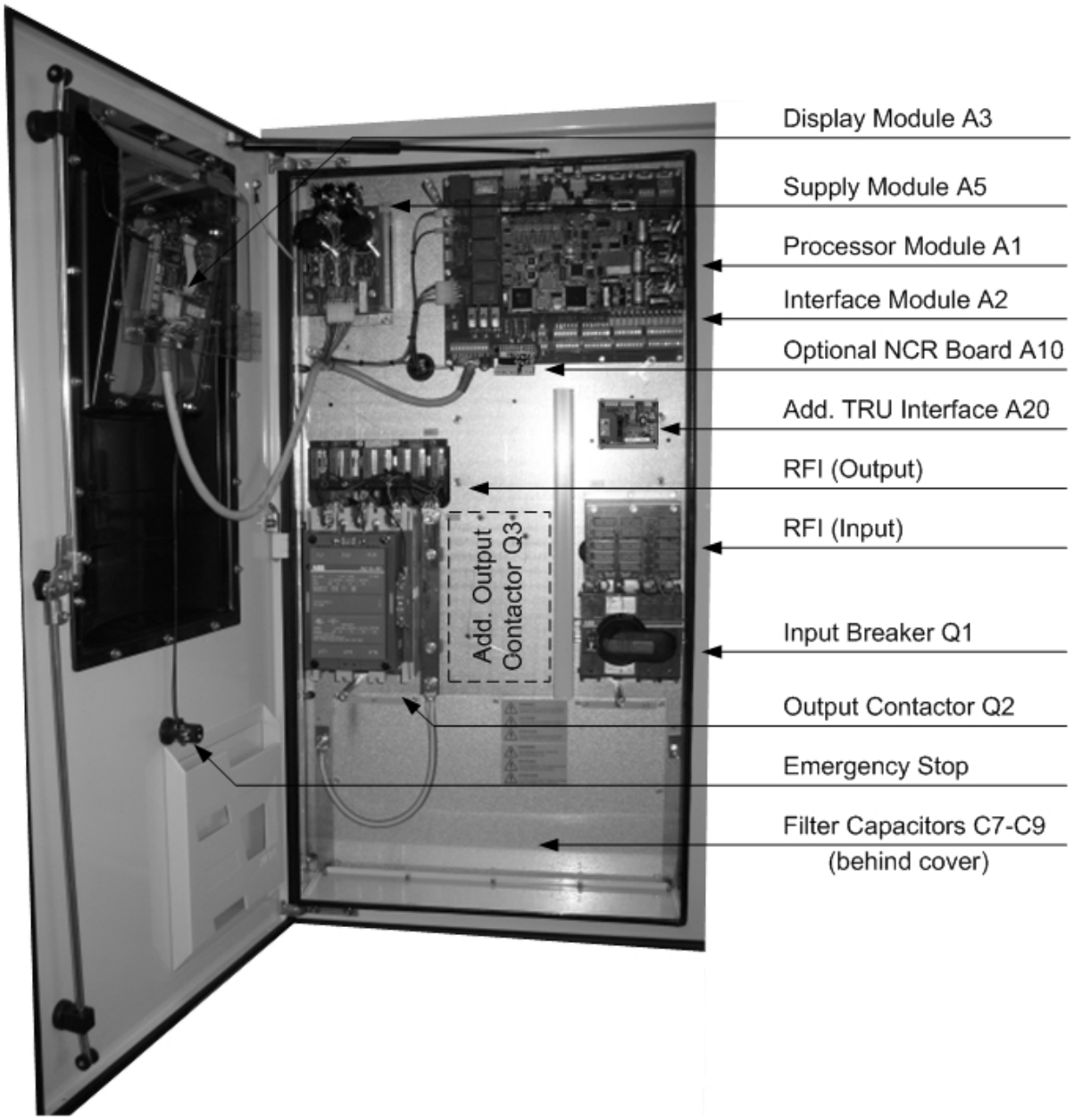

Figure: 10.1: Front View

In mobile and bridge mounted units, the display module and the emergency stop button are situated in a separate box.

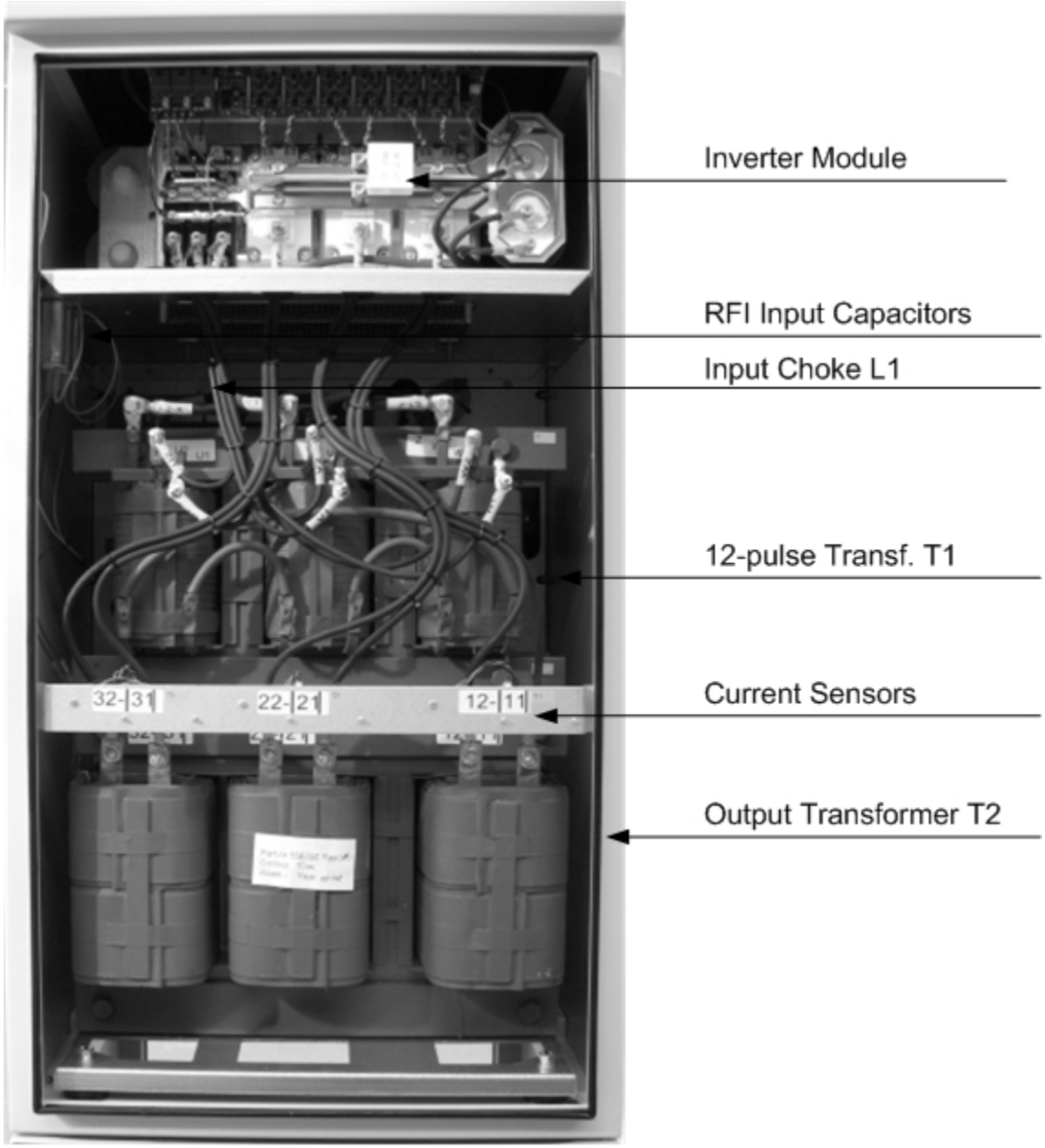

Figure 10.2: Rear View

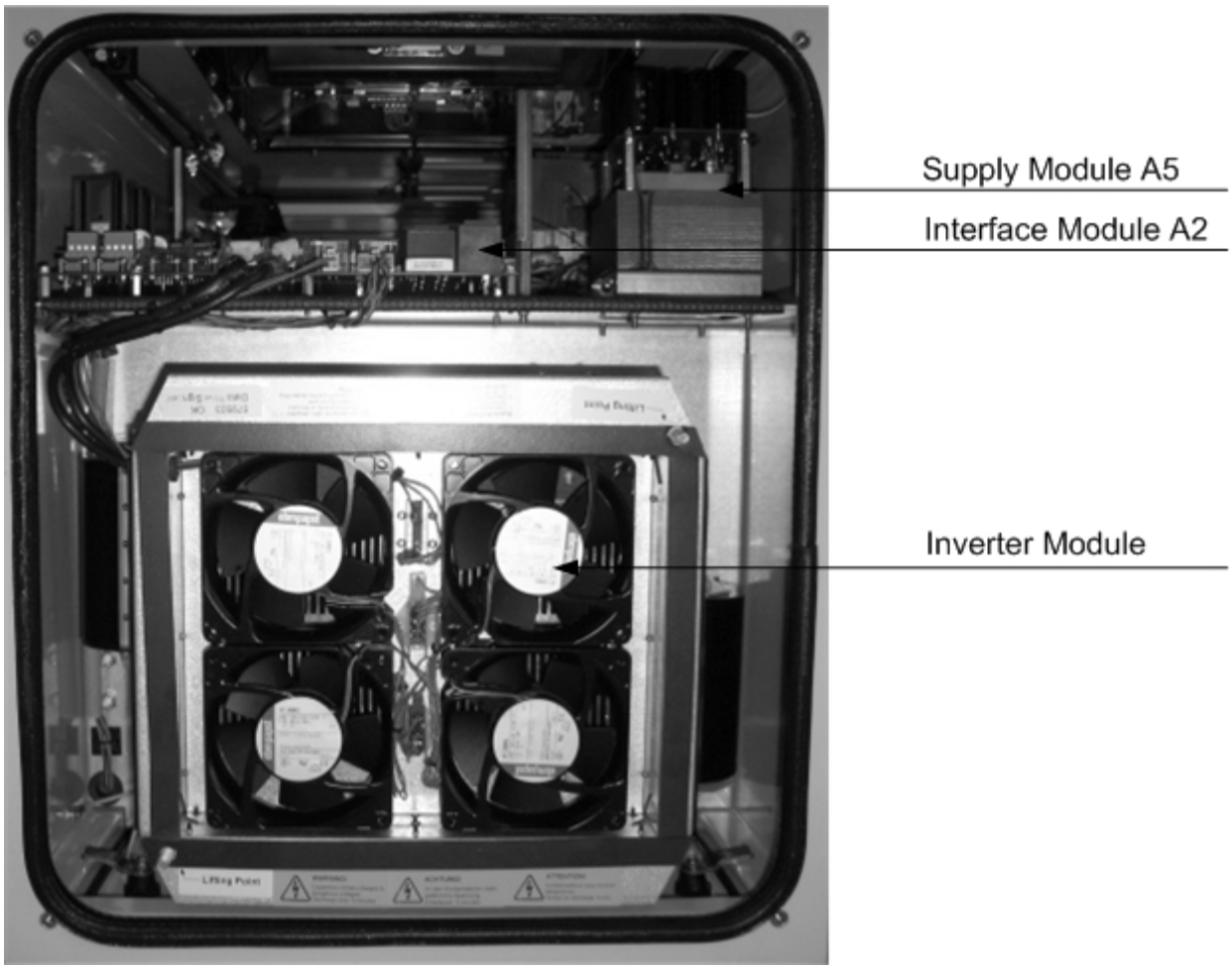

Figure 10.3: Top/front View

11.0 Options

This ground power unit might be equipped with one ore more of the following options:

578902 Input Autotransformer (diagram 478901)

(Only valid for units with ratings of 60 kVA max.)

Transformer, which enables connection of the ground power unit to the following mains voltages:

- 3 x 200 VAC (recommended pre-fuse: 315 A)
- 3 x 230 VAC (recommended pre-fuse: 315 A)

The transformer is placed in a base module (kindly refer to section 5)

578903 Base module

Additional base module, which extends the height /length of the ground power unit by 345 mm and the weight by 20 kg. (kindly refer to section 5)

578904 Lockable Door

As a standard, the GPU is supplied with a quarter-turn lock intended for a double bit 5 mm pin key. One key is supplied per ground power unit.

On an optional basis, the ground power unit can be supplied with a lockable swing handle at the front door. The handle is locked by a profile cylinder according to DIN 18252 (depth = 40 mm). Each ground power unit is supplied with 2 identical keys.

578905 Cover for instrumentation

A protective cover in front of the operator's panel.

578906 Remote Control Box

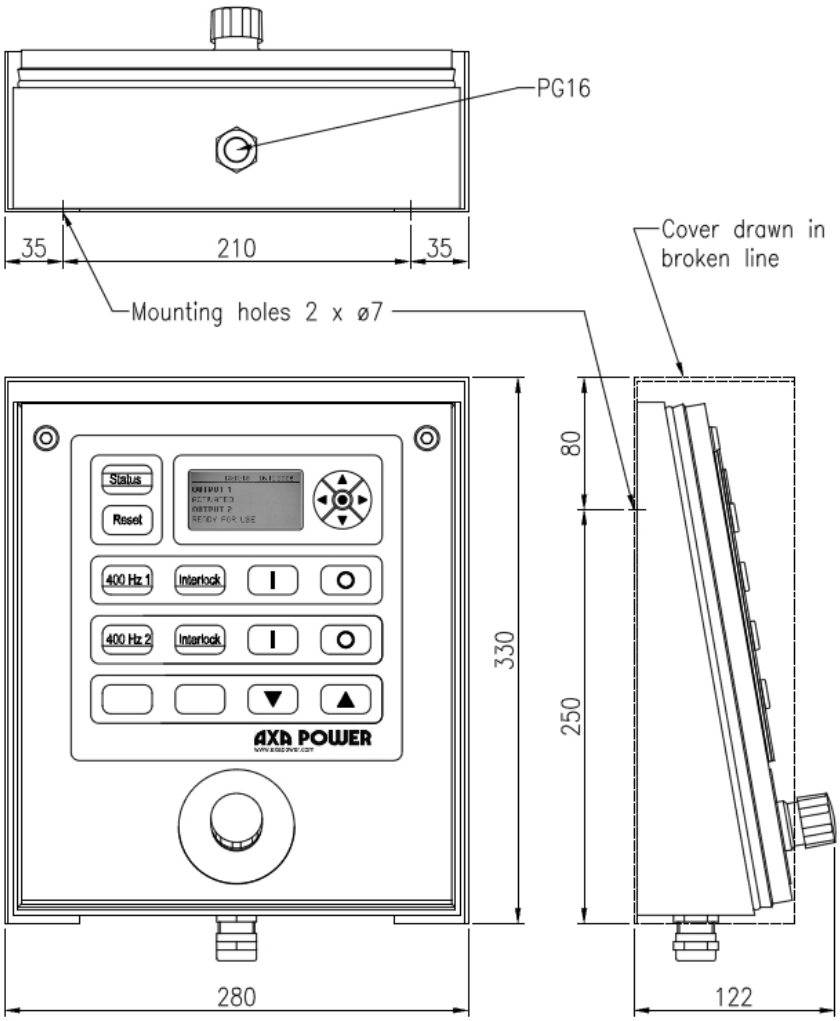

The control box is used for operation of the ground power unit, if placed away from the aircraft parking position or placed under a passenger boarding bridge.

578907 Additional Output Contactor (diagram 478901)

AXA 2300 compact ground power units are as a standard equipped with one output contactor. All models are, however, prepared for an additional output contactor.

578909 Door Interlock (diagram 478901)

Interlock, which ensures that the ground power unit passes into stand-by mode if the door is opened.

578910 Neutral Conductor Rupture Supervision

A broken neutral conductor in the 400 Hz cable combined with an unbalanced aircraft load could lead to a destructive phase-neutral voltage in the aircraft and to hazardous voltages between the aircraft chassis and the ground level. The NCR option secures that a broken neutral will be detected instantaneously.

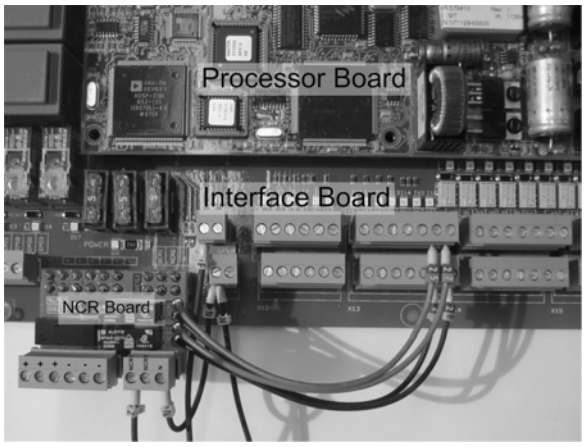

NCR Board

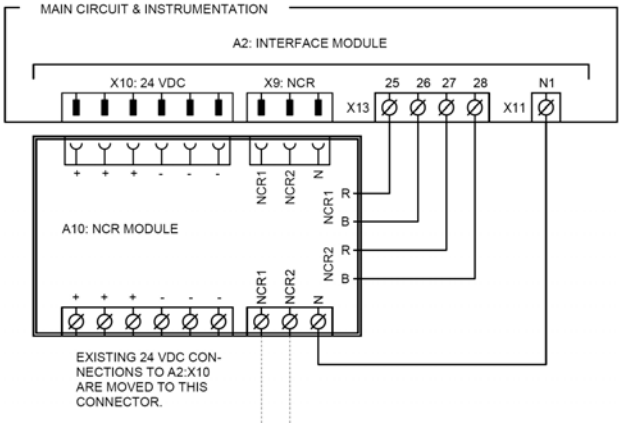

Internal wiring diagram

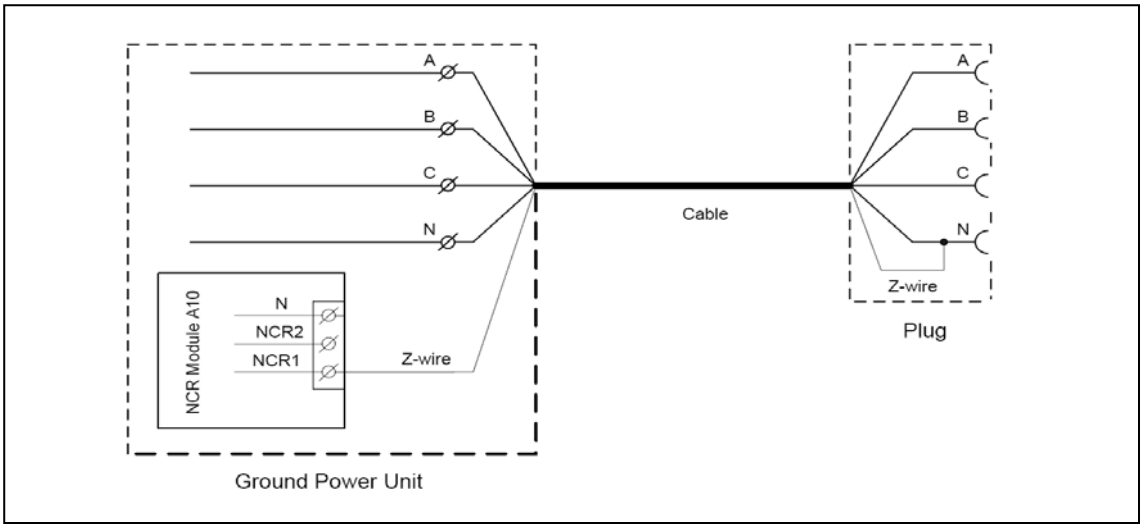

Wiring diagram for Neutral Conductor Rupture Supervision

Unbalanced voltage at the aircraft connector due to a broken neutral would add a 400 Hz voltage to the 28 VDC interlock voltage measured at the ground power unit. If the injected AC voltage exceeds approx. 20 VAC the output is disconnected. This type of error is recognised as an interlock failure by the ground power unit. Since the disconnection is a reaction against a heavy unbalanced voltage at the aircraft connector, it means that this type of supervision does not protect sensitive equipment in the aircraft. The NCR option protects personnel as well as the aircraft in case of a broken neutral.

578911 90% Switch Interlock

This feature supervises that the 90% switch in the 400 Hz plug is activated. If the 90% switch is not activated, the respective outlet cannot be engaged. The option also includes a potential free output showing whether the 90% signal is present or not. The option is valid for ground power units with one or two outlets.

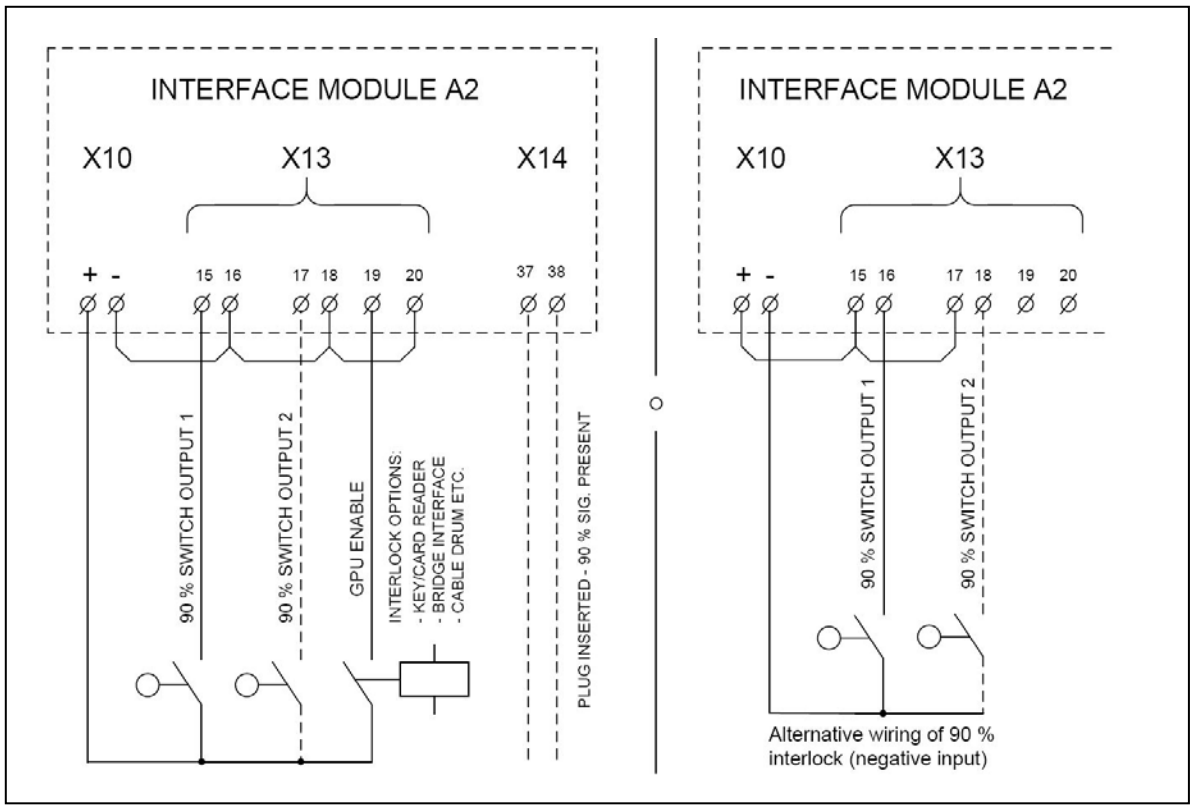

Wiring diagram for 90 % Switch and GPU Enable

578912 GPU Enable (key reader, bridge, cable drum etc.)

An option which can be used as interlock for instance for key/car reader, boarding bridge, cable drum, pit flooded etc. The option requires a constant closing function of the external signal providers. If the circuit is broken, the ground power unit stops. See wiring diagram above.

578915 RS485 Interface (diagram 478001)

As standard, ground power units are supplied with connections for RS232. The RS485 Interface option will provide a galvanic isolated RS485 connection and allow for multi-point connection.

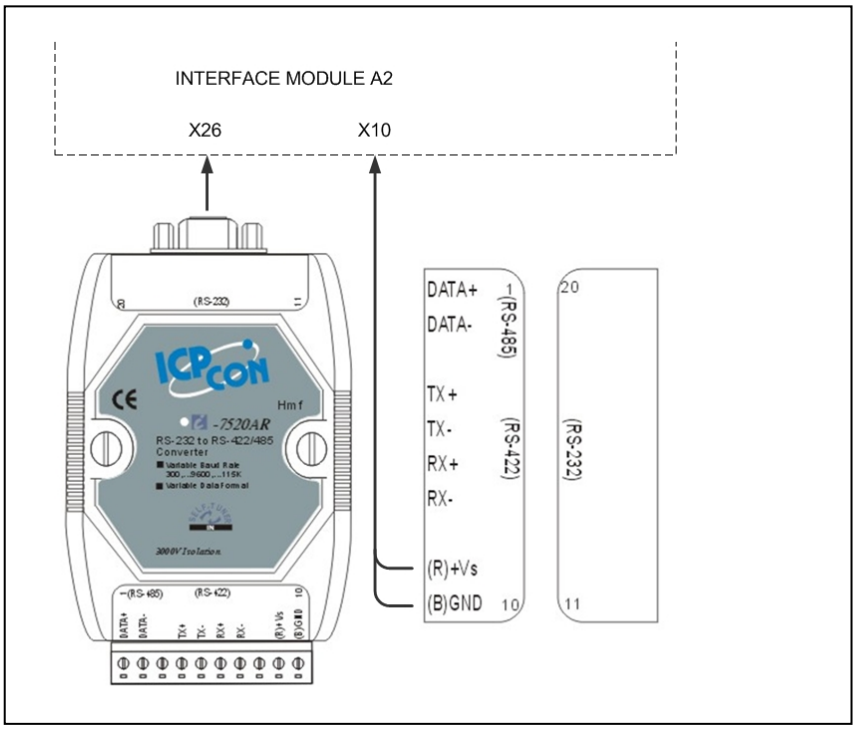

PIN Assignment for RS485 Interface

578916 TCP/IP Interface (diagram 478001)

TCP/IP or Ethernet Interface is today a widely used interfacing port. With this option it is possible to interface with the ground power unit with MODBUS/JBUS RTU protocol via TPC/IP data port.
A Netbiter ® Modbus Gateway module is used to interface between RS232 and TCP/IP.
Ethernet Baud rate: 10/100 Mbit/s

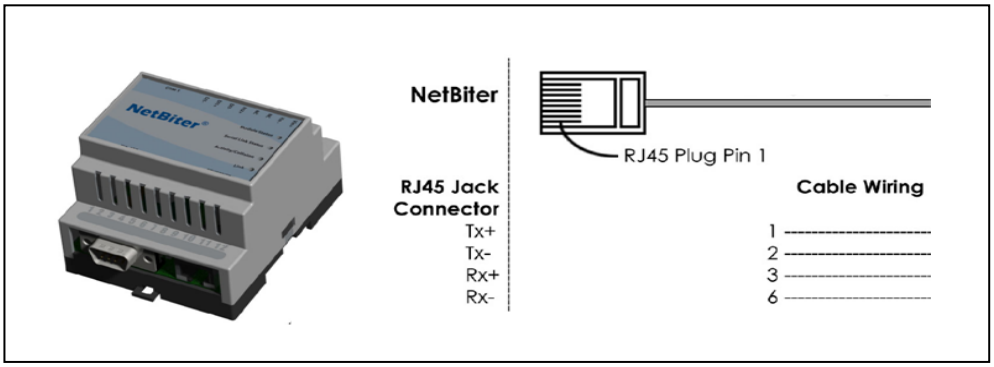

578917 Military Interlock

For military aircraft, the interlock system must be switched from civilian interlock to military interlock by means of selector switch (S30) behind the front door. The GPU hereafter delivers 28 VDC on the E pin and this voltage is returned to the F pin by the aircraft.
The E terminals are prefused with 2 A per outlet.

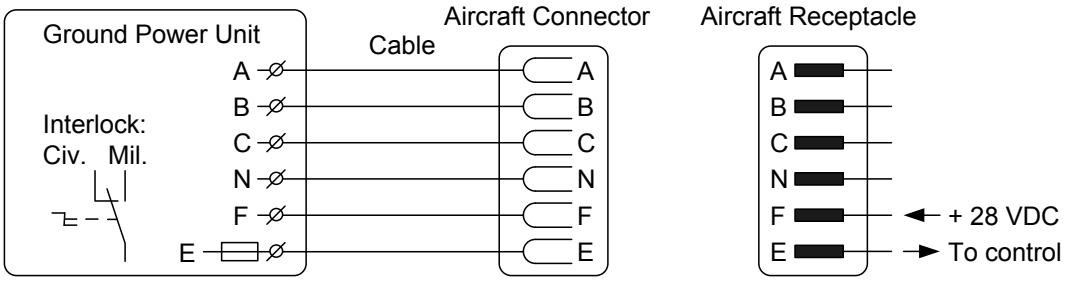

Standard wiring diagram for military interlock

573923 Display Heater

For fixed units with display on front door

573924 Control Box Heater

For bridge mounted or mobile units with remote control box.

573956 Service Tool

In a standard ground power unit, error and power logs as well as real time readings are available via the display located on the unit. With the service tool, it is possible to download the error and power logs to a PC or laptop and further one can view the real time readings on the monitor.
The tool includes soft-ware and hard-ware lock for installation on a PC or laptop (PC/Laptop is not included). Further, it includes a data cable and a serial to USB adaptor, enabling connection to the USB port on a PC / Laptop. The data cable from the PC is connected to terminal X26 at the Interface Module A2.

591100 Auto Calibration Plug

Short circuit connection for Plug & Play set-up.
See section 7.

12.0 For units equipped with 28 VDC outlet

12.1 General Description

All AXA2300 units from 30 kVA to 90 kVA can be equipped with a 28 VDC output.

As the 28 VDC part is supplied from the 400 Hz output, simultaneous use of the 400 Hz and the 28 VDC outlets is not possible.

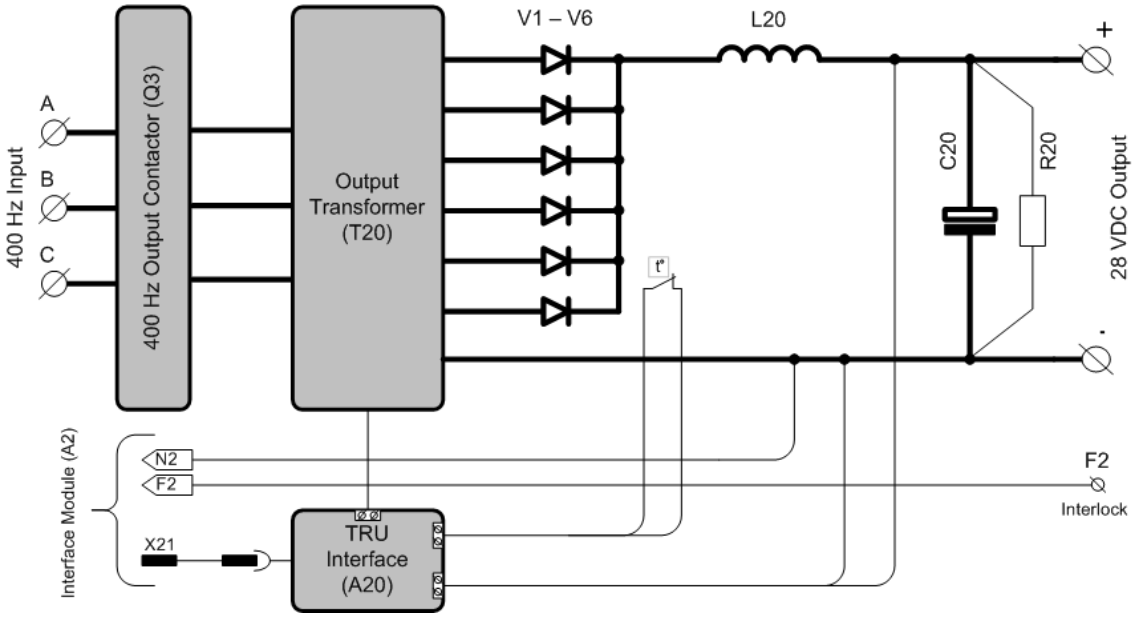

12.1 Principle of 28 VDC TRU

The 28 VDC part is basically a Transformer Rectifier Unit (TRU), where the output voltage is controlled by varying the 400 Hz input voltage. The DC current is not measured directly, because it can be calculated very precisely on the basis of the 400 Hz parameters.

The 400 Hz output contactor (Q3) and the TRU Interface board (A20) are both located inside the 400 Hz cubicle, while the remaining components shown in figure 12.1 are located in a separate base module – Please refer to section 5 for outline drawings.

12.2 Connection of Cables

The supply cables to the aircraft are connected to the terminals labelled + and –. Recommended output cable dimension is 2 x 120 mm².

To secure personnel's health and safety, the converter is equipped with an interlock system. The system ensures that the output only stays engaged as long as the plug is inserted into the aircraft receptacle. E.g. as long as 28 VDC is present at terminal F2.

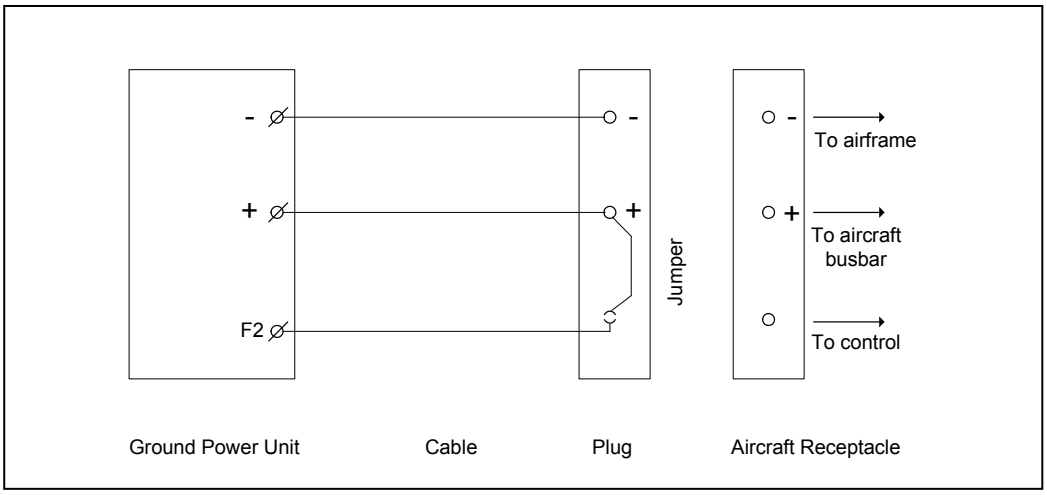

12.2 Standard wiring diagram, Civil aircraft

For service, maintenance and test purposes, the interlock system can be by-passed via the display setup. To secure personnel health and safety, the converter automatically returns into normal mode once it receives a 28 VDC voltage at terminal F2. E.g. when the plug is connected to an aircraft.

The 28 VDC output can be operated remotely via the I/O terminals related to Output 2. Please refer to section 4.8.

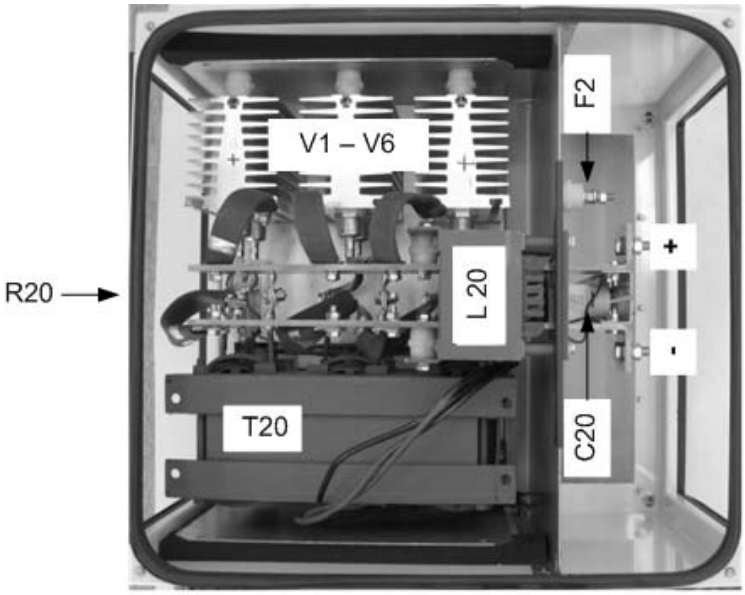

12.3 Top View of 28 VDC Module

12.3 Operator's Instruction

The 28 VDC is controlled by means of the Display / Keyboard Interface – Please refer to section 6.

To adapt the converter to different types of aircraft, it is possible to set a maximum DC current level in steps of 300 Amp. (e.g. 600, 900, 1200, 1500, 1800, 2100 and 2400 Amp). To do so, use the arrow push buttons at the keyboard. To ensure hassle-free starting of the aircraft engine, the current limit function is delayed 0,7 seconds.

12.4 Setup of Parameters

Further to the parameters that can be viewed and changed according to section 7, it is possible to adjust the output voltage and the cable compensation of converters equipped with 28 VDC output. To adjust the cable compensation:

1. Apply nominal load by means of a load bank.
2. Select "DC CABLE COMPENSATION" via the Setup Mode.
3. Adjust the compensation by means of the vertical arrow buttons at the display keyboard, until the voltage at the aircraft connector equals the no load voltage.

12.5 Specifications

Output:

Voltage	:	28 VDC
Current	:	600 A continuously
Voltage regulation	:	< 0,5%
Voltage ripple	:	< 1%
Voltage transient recovery	:	Complies with ISO 6865 / MIL-704E
Overload capability	:	1200 A for 30 seconds (minimum) 1800 A for 10 seconds (minimum) 2100 A for 5 seconds (minimum) 2400 A for 2 seconds (minimum)

To protect the aircraft, the output voltage is decreased by 1 V per 300 A in the overload range (600-2400 A).

Setup:

Output voltage	:	20-32 V
Voltage compensation	:	0-4 V per 600 A
Current limit	:	600-2400 A in steps of 300 A

Protections:

Rectifier temperature to high

Short circuit at output

Over-and under voltage at output in case:

U < 20 VDC for more than 4 seconds

U > 32 VDC for more than 4 seconds

U > 40 VDC for more than 1 second

Physical:

Additional weight to 400 Hz unit: 100 kg

For dimension please refer to section 5 (e.g. units equipped with base module).

12.6 Trouble Shooting & Repair

Rectifier temperature too high (error code 4900):

1. Let the unit cool down and Reset
2. Check airflow /air-filter/fans
3. Check temperature sensor at rectifier heat sink
4. Check TRU interface and wiring

Output Under Voltage < 20 V – 4s (error code 3900):

1. Could be due to a heavy overload – Reset unit.
2. Check output voltage setup value.
3. Check TRU interface and wiring

Output Over Voltage > 32 V / 40 V – 4s / 1s (error code 3300 & 3400):

1. Could be due disconnection of a heavy overload – Reset unit.
2. Check output voltage setup value.
3. Check TRU interface and wiring